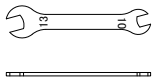

double-ended spanner

ring catcher

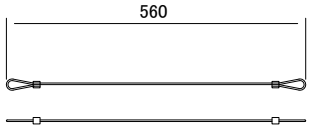

φ3 drop preventing wire for FP-Z series (2pcs)

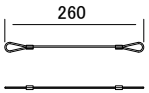

φ2.5 drop preventing wire for FP-ZUH series (2pcs)
NOT used for FP-Z8000/Z6000

Ceiling mount	FPM-KZ100S weight: 3.87kg
Projector	FP-Z6000 weight: 19.8kg
Projector	FP-Z8000 weight: 20.7kg

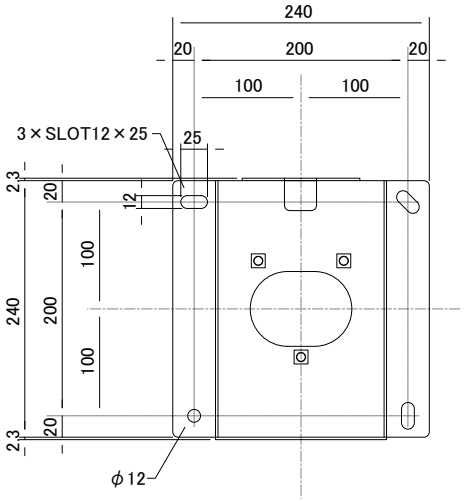

TOP VIEW of ceiling mount 1:5

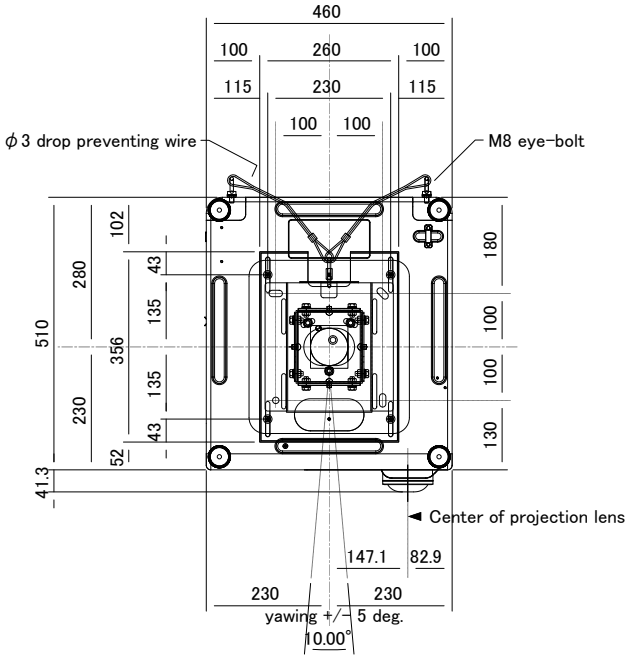

TOP VIEW

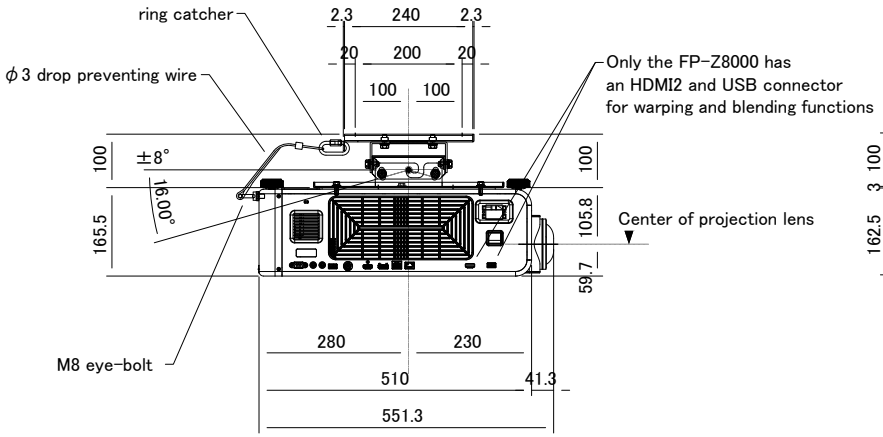

Projector forward and backward ±30mm

SIDE VIEW

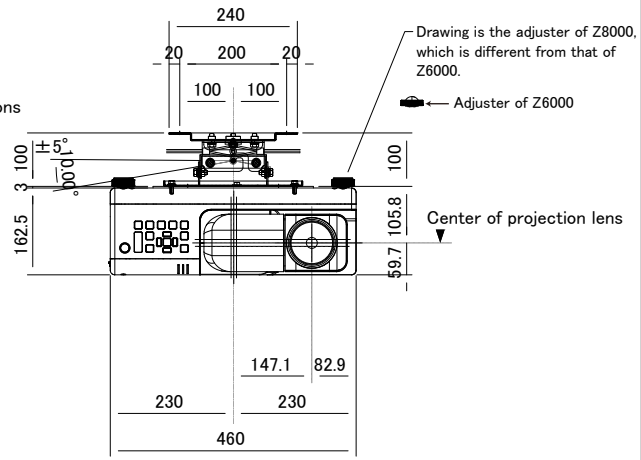

yawing +/- 5 deg.

FRONT VIEW

*"Projection lens center" indicats the center position when lens shift is zero.

DRAWING HISTORY					CHECKED	APPROVED	APPROVED	FORM	SCALE	TITLE FP-Z8000/Z6000 with ceiling mount
								DESIGN	DATE	M0deg, L180deg