FUJIFILM

## Surveillance Camera

# FUJIFILM SX800

## Owner's Manual: LAN ONVIF Mode

FUJIFILM Corporation

BL00005186-201

# Table of Contents


**Safety Precautions** 1

**For Your Safety** 1

⚠ WARNINGS 1

⚠ CAUTIONS 1

General Precautions 1

**NOTICES** 2

Caution: 2

FCC Warning: 2

For Customers In Canada 2

About the Icons 2

Disposal of Electrical and Electronic Equipment in Private Households In the European Union, Norway, Iceland and Liechtenstein: 3

**Precautions for Use** 4

**Operating Environment** 4

**Installation** 4

**Use** 4

**Network Settings** 4

**Introduction** 5

**Parts of the Camera** 5

The Control Panel 5

**Installation and Connection** 6

**Installation** 6

Screw Hole Specifications 6

**Connection Schematic** 7

**Operating Mode Selection: DIP Switches** 7

**Connecting to a Computer** 8

**Viewing and Recording the Live Feed** 9

**Launching a Web Browser** 9

**Preferences** 10

**CAMERA SETTING** 11

AF SETTING 11

FOCUS AREA 11

AF SENSITIVITY 11

IRIS 11

SHUTTER SPEED 11

GAIN 11

DAY/NIGHT 12

EXTERNAL TRIGGER 12

IR WAVELENGTH 13

IMAGE STABILIZATION 13

**IMAGE QUALITY SETTING** ..... **14**
OPTICAL FILTER(DAY) ..... 14
OPTICAL FILTER(NIGHT) ..... 14
WDR ..... 14
BACKLIGHT CORRECTION ..... 14
HEAT HAZE REDUCTION ..... 14
FOG REDUCTION ..... 14
NOISE REDUCTION ..... 15
DIGITAL ZOOM ..... 15
USE SETTING ..... 15
BRIGHTNESS ..... 15
CONTRAST ..... 15
SATURATION ..... 15
SHARPNESS ..... 15
WHITE BALANCE ..... 15
**SYSTEM** ..... **16**
MODEL NAME ..... 16
SERIAL NO. ..... 16
FW VER. ..... 16
APPLICATION VER. ..... 16
TIME ZONE ..... 16
NTP SERVER ADDRESS ..... 16
PORT NUMBER ..... 16
CHECKING INTERVAL ..... 16
PRIORITY OF TIME SETTING ..... 16
IN-CAMERA TIME SETTING ..... 16
ABOUT DEVICE ..... 16
**PTZ SETTING** ..... **17**
RS485 BAUD RATE ..... 17
RS485 ID ..... 17
RS485 TERMINATION ..... 17
PTZ POSITION INQUIRY ..... 17
Pelco-P/Pelco-D ..... 17
PELCO CMD INTERVAL ..... 17
**SYSTEM MAINTENANCE** ..... **18**
REBOOT ..... 18
RESET SETTINGS ..... 18
IMPORT CONFIGURATION FILE ..... 18
EXPORT TO CONFIGURATION FILE ..... 18
FW UPDATE ..... 18
COPY LOG DATA ..... 18
CHANGE PASSWORD ..... 18
**SECURITY** ..... **19**
RTSP AUTHENTICATION ..... 19
RTSP AUTHENTICATION ALGORITHM ..... 19
HTTP AUTHENTICATION ..... 19
**NETWORK SETTING** ..... **20**
IPv4 ADDRESS ..... 20
IPv4 SUBNET MASK ..... 20
IPv4 DEFAULT GATEWAY ..... 20
MAC ADDRESS ..... 20
IPv4 MTU ..... 20
PRIORITY DNS SERVER ..... 20
SECONDARY DNS SERVER ..... 20
IPv4 ADDRESS ..... 20

**PORT** ..... **21**
HTTP PORT ..... 21
RTSP PORT ..... 21
**VIDEO** ..... **22**
VIDEO SYSTEM ..... 22
VIDEO FORMAT ..... 22
ASPECT FOR VIDEO ..... 22
BIT RATE ..... 22
VIDEO QUALITY ..... 22
FRAME RATE ..... 22
ENCODING ..... 22
I FRAME INTERVAL ..... 22
**DISPLAY/OSD SETTING** ..... **23**
DATE DISPLAY ..... 23
TIME DISPLAY ..... 23
DATE DISPLAY FORMAT ..... 23
**言語/LANG.** ..... **24**
言語/LANG. ..... 24

**Troubleshooting** **25**

**Defaults** **26**
CAMERA SETTING ..... 26
IMAGE QUALITY SETTING ..... 26
SYSTEM ..... 26
PTZ SETTING ..... 26
SYSTEM MAINTENANCE ..... 26
SECURITY ..... 26
NETWORK SETTING ..... 26
DISPLAY/OSD SETTING ..... 26
言語/LANG. ..... 26

**Specifications** **27**

# Safety Precautions

## For Your Safety

This section lists important precautions that must be followed to ensure safe and correct use of the product. Read them before using the product and observe them during use.

The ⚠ **WARNING** and ⚠ **CAUTION** indications in this document indicate the following:

| | |
|---|---|
| ⚠ **WARNINGS** | Failure to observe warnings could result in death or serious injury. |
| ⚠ **CAUTIONS** | Failure to observe cautions could result in injury or property damage. |

### ⚠ WARNINGS

- Take all steps necessary to prevent water entering the product. Failure to observe this precaution could result in fire or electric shock. Should water find its way in, disconnect the power source immediately.
- Be sure the product is installed securely. Serious accidents could result should the product fall from a height.
- When working in high places, work with a partner or partners, use a safety line, and take all other precautions necessary to ensure safety. Slipping, falling, or loss of balance could result in serious accidents.
- When installing the camera in high places, ensure that people below keep their distance. Falling objects could cause serious accidents.
- Ensure that the surface on which the camera is installed is level. Failure to observe this precaution could cause the camera to fall, potentially causing serious accidents.

### ⚠ CAUTIONS

- Keep the product out of direct sunlight.
- Do not turn the product on without first confirming that the power supply is connected correctly.
- The product could cause injury if dropped during transport. Take all precautions necessary to ensure that the product is not dropped.
- Ensure that the voltage of the power supply matches the product's rated voltage. Incorrect voltages could damage the product or result in fire or electric shock.
- When connecting or disconnecting the power cable, hold the plug and not the cable. Damage to the cable could result in fire or electric shock.
- Should you detect any abnormalities such as smoke, unusual noises or smells, or the presence of foreign matter inside the product, disconnect the power supply immediately and contact the original retailer.
- Do not disassemble or modify. Failure to observe this precaution could result in electric shock or product malfunction. Malfunctions or damage resulting from customers disassembling or modifying the product are not covered under warranty.
- Do not aim the camera at the sun. Direct sunlight focused through the lens could damage the product's internal parts.
- Install the camera base down. Installing the camera in other orientations could lead to warping that may impair product performance.

### General Precautions

- Use the product only as described in this manual.
- The camera and its accessories are precision devices. Under no circumstances should they be subjected to excessive force.
- Install the camera in a housing or other location where it will not be exposed to rain, wind, dust, or direct sunlight.
- Bringing the camera abruptly from a cold location to a warm and humid environment could cause the lens to fog. Take measures to allow the camera to adapt to the new environment before subjecting it to changes in temperature and humidity.
- Replace the cap if the camera will not be used for an extended period.
- The camera lens has a special anti-reflective coating. As a result, the back of the lens may appear spotted, but this has no effect on performance.

# NOTICES

Verification
Model Number: SX800
Trade Mark: Fujifilm

This device complies with Part 15 of the FCC Rules.
Operation is subject to the following two conditions:
(1) This device may not cause harmful interference, and (2) this device must accept any interference received, including interference that may cause undesired operation.

## Caution:

This equipment has been tested and found to comply with the limits for a Class A digital device, pursuant to part 15 of the FCC Rules.
These limits are designed to provide reasonable protection against harmful interference when the equipment is operated in a commercial environment.
This equipment generates, uses, and can radiate radio frequency energy and, if not installed and used in accordance with the instruction manual, may cause harmful interference to radio communications. Operation of this equipment in a residential area is likely to cause harmful interference in which case the user will be required to correct the interference at his own expense.

## FCC Warning:

To assure continued compliance, follow the attached installation instructions. This includes using the provided power cord and shielded interface cables when connecting to computer or peripheral devices. Also, any unauthorized changes or modifications to this equipment could void the user's authority to operate this device.

## For Customers In Canada

CAN ICES-3(A)/NMB-3(A)

**WARNING**: This equipment is compliant with Class A of CISPR32. In a residential environment this equipment may cause radio interference.

This product complies with the following EU Directives:
- RoHS Directive 2011/65/EU
- EMC Directive 2014/30/EU

Compliance with these directives implies conformity to applicable harmonized European standards (European Norms) which are listed on the EU Declaration of Conformity issued by FUJIFILM Corporation for this product or product family.

This compliance is indicated by the following conformity marking placed on the product:

This marking is valid for non-Telecom products and EU harmonized Telecom products (e.g.Bluetooth).

## About the Icons

The symbols on the product represent the following:

| | |
|---|---|
| | AC |
| | DC |
| | Class II equipment (The construction of the product is double-insulated.) |

## Disposal of Electrical and Electronic Equipment in Private Households In the European Union, Norway, Iceland and Liechtenstein:

This symbol on the product, or in the manual and in the warranty, and/or on its packaging indicates that this product shall not be treated as household waste. Instead it should be taken to an applicable collection point for the recycling of electrical and electronic equipment. By ensuring this product is disposed of correctly, you will help prevent potential negative consequences to the environment and human health, which could otherwise be caused by inappropriate waste handling of this product.

# Precautions for Use

## Operating Environment

- The camera can be used at temperatures of from −10 to +50 °C (temperatures below freezing are only supported if the power supply is not interrupted) and at humidities of from 10 to 80% (no condensation).
- Prolonged use at high temperatures or humidities could degrade components, shortening product life.
- Do not install the product where it will be exposed to solvents or other chemicals.

## Installation

- Do not install LAN or audio cables in close proximity to cables for fluorescent lights or other electrical devices. Failure to observe this precaution could impair sound or image quality. Move the cables if signal quality is affected.
- Using the product in close proximity to powerful electromagnetic fields, such as those produced by television transmitter antennas, electric motors, or transformers, could result in distorted or wavy pictures. Should this occur, use steel cable shielding.
- Use a Category 5 or better shielded twisted pair (STP) LAN cable for LAN connections.
- Plastic cable insulation may sometimes be damaged by crows or other birds. Protect cables using a cable conduit.
- Fix cables in place so that they are not subject to repeated vibration, friction, or tugging. Failure to observe this precaution could cause the cable to break.
- Install the product base down.

## Use

- Do not aim the lens directly at the sun or other bright light sources or reflections. Failure to observe this precaution could result in deterioration of the image sensor color filter, affecting picture color.
- Do not subject the product to strong physical shocks or vibration. Failure to observe this precaution could result in product malfunction.
- Clean the product with a soft, dry cloth. Never use chemically-treated cloths or solvents such as benzine (petroleum ether), thinner, or alcohol. Failure to observe this precaution could cause warping or discoloration.
- Do not apply force to the connectors when handling the product. Failure to observe this precaution could result in the product being disconnected or damaged.

## Network Settings

- You will need to supply an IP address, subnet mask, and gateway IP address.
- The frame rate may drop if multiple streams are transmitted via unicast.
- When connected to multiple devices, the product will transmit data to all devices at the rate supported by the device with the slowest receiving rate.

# Introduction

## Parts of the Camera

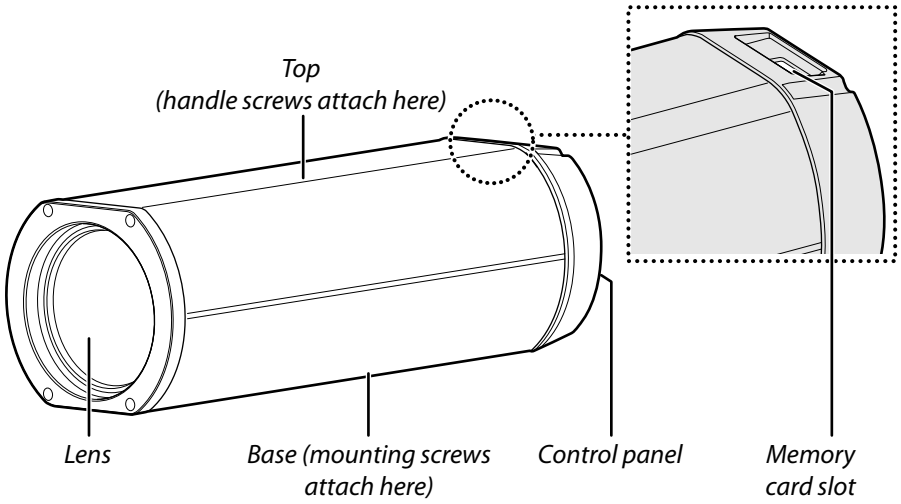


### The Control Panel

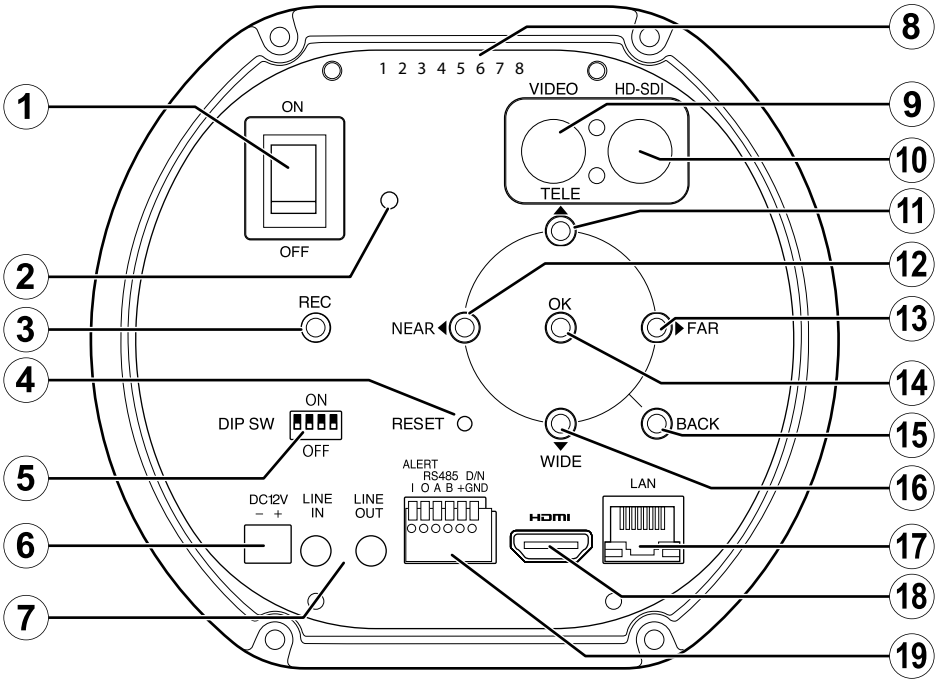


| Item | Name |
|---|---|
| ① | Power switch |
| ② | Power lamp |
| ③ | **REC** (record) button |
| ④ | **RESET** button |
| ⑤ | DIP switches (4 bits) |
| ⑥ | Power connector |
| ⑦ | Audio input/output connectors |
| ⑧ | Serial number |
| ⑨ | Video output connector |
| ⑩ | HD-SDI output connector |

| Item | Name |
|---|---|
| ⑪ | **TELE** button |
| ⑫ | **NEAR** button |
| ⑬ | **FAR** button |
| ⑭ | **OK/MENU** button |
| ⑮ | **BACK** button |
| ⑯ | **WIDE** button |
| ⑰ | LAN connector |
| ⑱ | HDMI connector |
| ⑲ | Six-pin connector |

# Installation and Connection

## Installation

Use the screw holes on the base to secure the camera to a mount or other surface.

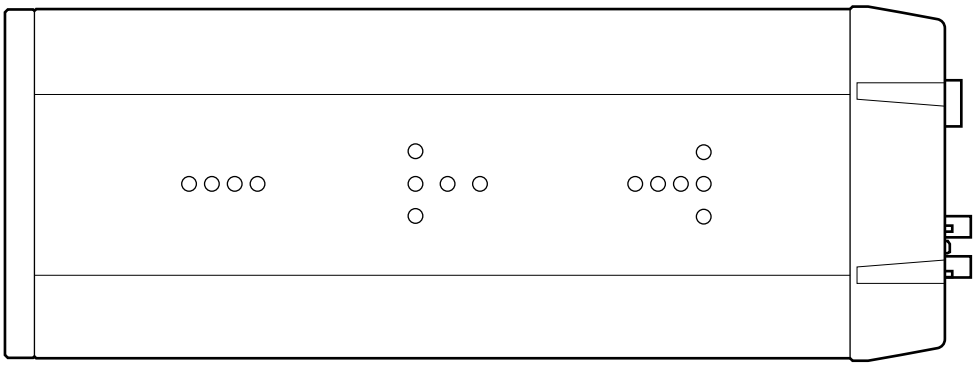

| | |
|---|---|
| ⚠ **WARNING** | Attach the product securely to a surface that can safely bear the combined weight of the camera and associated hardware. Do not mount the camera in unstable locations or locations subject to frequent vibration or attach it to weak materials such as drywall, ALC (autoclaved lightweight concrete), concrete blocks, or plywood. Injury could result should the product fall from its mounting. |

| | |
|---|---|
| ⚠ **CAUTIONS** | • Use ¼", UNC 20 thread screws with a thread engagement length of 6.5 to 10 mm.<br>• Install the camera base down. |

A handle can be attached using the screws on top of the camera.

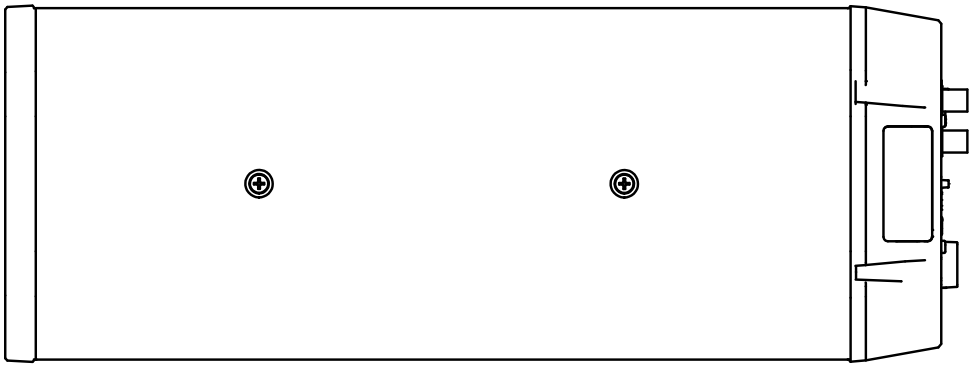

⚠ **CAUTIONS**

- Use M4 screws with a thread engagement length of at least 4 mm and a protrusion of no more than 6 mm.
- Do not use the screw holes on top of the camera for any other purpose.

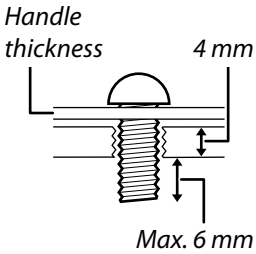


### Screw Hole Specifications

The specifications for the screw holes on the top and base of the camera are as follows:

| | Type | Quantity | Depth | Tightening torque |
|---|---|---|---|---|
| **Top** | M4 | 2 | Pass through (threaded depth 4 mm) | 80–100 N•cm |
| **Base** | ¼", UNC 20 thread | 15 | 10 mm | 240–300 N•cm |

## Connection Schematic

The schematic below illustrates how the camera can be installed for use in LAN ONVIF mode.

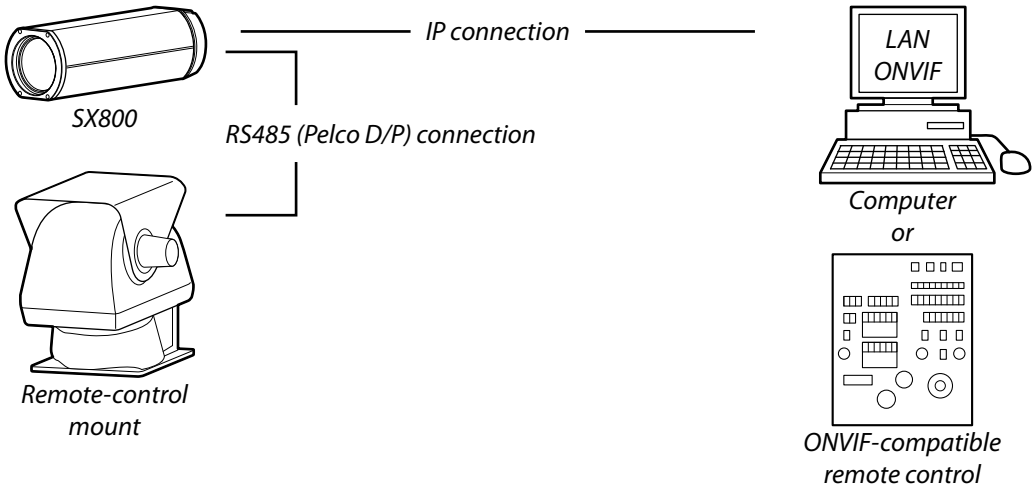


When the camera is connected to a computer in LAN ONVIF mode, camera settings can be adjusted using dedicated software. An ONVIF application can be used to view the live feed and control the camera.

## Operating Mode Selection: DIP Switches

Use the DIP switches to select the operating mode.

| Operating mode | DIP switch | | | |
|---|---|---|---|---|
| | ① | ② | ③ | ④ |
| LAN ONVIF mode | OFF | ON | OFF | OFF |
| RS485 mode | ON | OFF | OFF | OFF |
| Stand-alone mode | ON | ON | OFF | OFF |

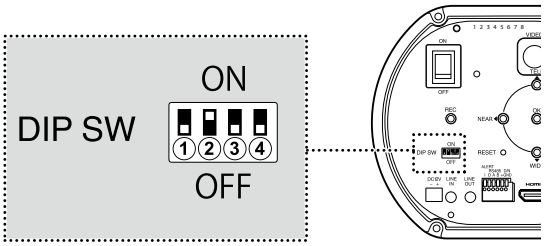

## Connecting to a Computer

**1 Connect the supplied plug to the power cable and plug the cable into the camera power connector.**

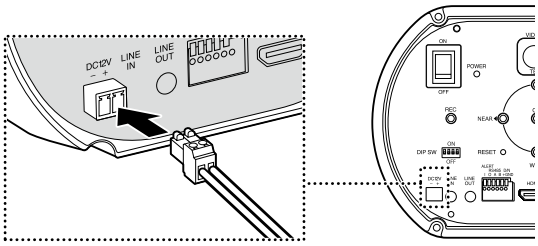


> ⚠ **CAUTION** Use only DC 12 V power.

> **TIP** Customers must supply their own power cable.

**2 Use an Ethernet cable to connect the camera to a computer.**

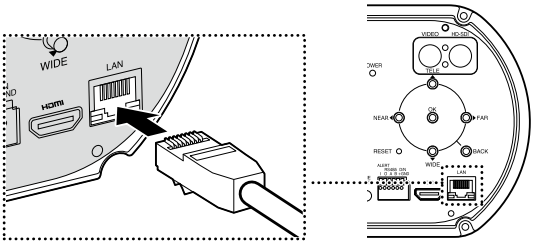


**3 Select LAN ONVIF mode by setting DIP switch ② to "ON" and DIP switches ①, ③ and ④ to "OFF".**

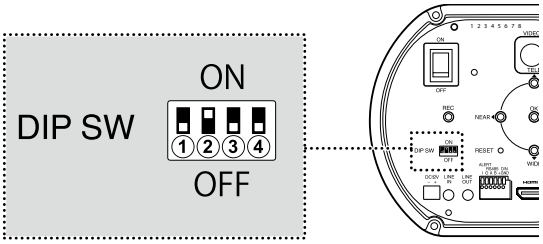


> **TIP** For information on using remote-control mounts or ONVIF-compatible control units, see the documentation provided with the device.

# Viewing and Recording the Live Feed

The camera's live feed can be viewed and recorded using a web browser.

## Launching a Web Browser

| | |
|---|---|
| **Supported operating systems** | Windows 10 |
| **Supported web browsers** | Google Chrome 71 or later |

For information on using the web browser, see the browser's online help. To connect to the SX800, you will need to assign it an appropriate IP address. The default IP address and subnet mask assigned to the camera at shipment are as follows:

| | |
|---|---|
| **IP address** | 192.168.1.10 |
| **Subnet mask** | 255.255.255.0 |

1. **Turn on the camera and computer.**
2. **Launch a web browser.**
3. **Enter the product IP address in the address bar ("http://[IP address]").**
   An administrator account creation dialog will be displayed.
4. **Enter a user name and password.**
   At shipment, the user name and password fields are blank.

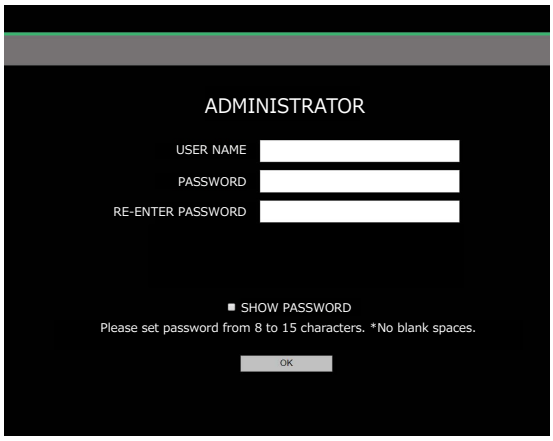


**TIPS**

- Choose a password 8 to 15 characters long. Take all steps necessary to protect the password.
- After 10 failed attempts, password entry will lock. The camera must then be re-initialized in stand-alone mode as described below.
  ***Note that this deletes all existing accounts.***
  ① Turn the camera off.
  ② Select stand-alone mode using the DIP switches on the rear control panel (page 7).
  ③ Turn the camera on.
  ④ Press and hold the **OK/MENU** button on the rear control panel for 3 seconds to display the menus.
  ⑤ Select **IP ADDRESS SETTINGS RESET** in the setup menu.
  ⑥ Turn the camera off and return to Step 3 of "Connecting to a Computer" (page 8).

**Note**: For more information, see the *Owner's Manual: Stand-Alone Mode*.

5. **Click OK.**
   Camera settings will be displayed.

# Preferences

Adjust camera settings.

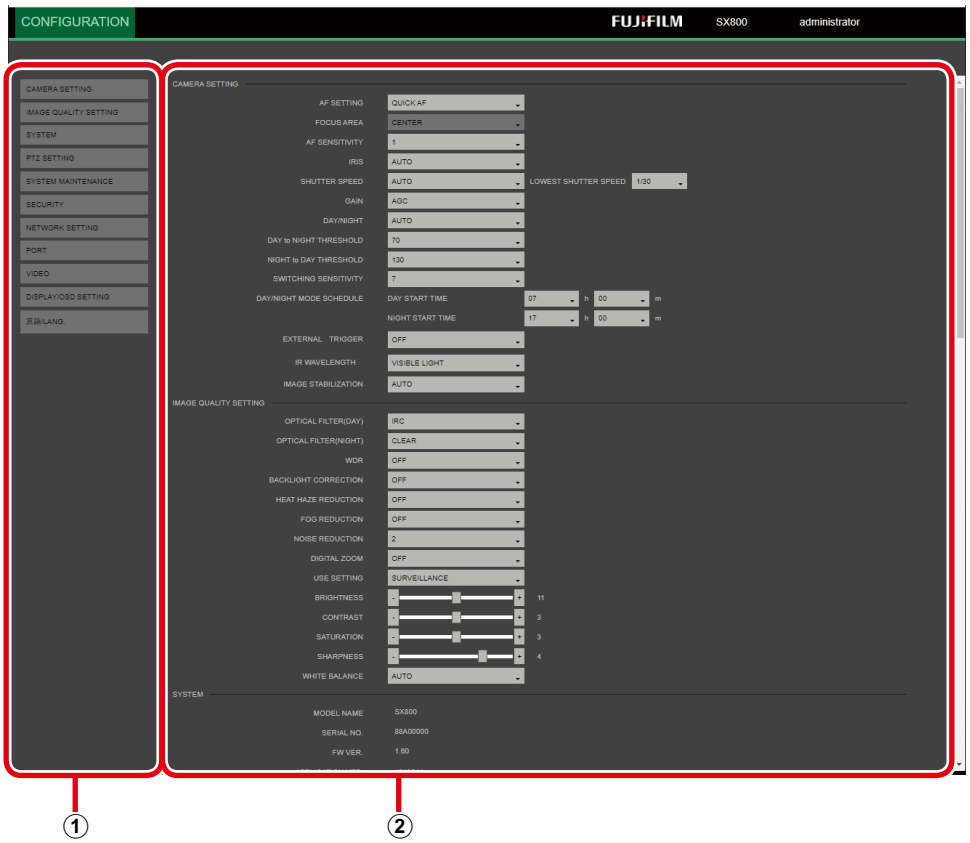


Choosing a category (①) displays the associated settings (②).

| Category | Description |
|---|---|
| **CAMERA SETTING** | Adjust basic camera settings. |
| **IMAGE QUALITY SETTING** | Adjust image quality settings. |
| **SYSTEM** | View the firmware version and other information. You can also set the camera clock and adjust other system-related settings. |
| **PTZ SETTING** | Adjust settings for remote-control mounts. |
| **SYSTEM MAINTENANCE** | Restart the camera, update camera firmware, and perform other forms of system maintenance. |
| **SECURITY** | Adjust network security settings. |
| **NETWORK SETTING** | Adjust basic network settings. |
| **PORT** | Choose ports for HTTP or RTSP. |
| **VIDEO** | Adjust video system and streaming settings. |
| **DISPLAY/OSD SETTING** | Adjust display settings. |
| **言語/LANG.** | Choose a language for camera menus and displays. |

⚠ **CAUTION** Do not insert or remove memory cards while the camera is on. Failure to observe this precaution could corrupt image files or damage the memory card.

# CAMERA SETTING

Adjust basic camera settings.

## AF SETTING

Choose how the camera focuses when autofocus is enabled via ONVIF.

| Options | | |
|---|---|---|
| CONTINUOUS AF | QUICK AF | ONE PUSH AF |

## FOCUS AREA

Choose how the camera selects the focus area when **CONTINUOUS AF** is selected for **AF SETTING** .

| Option | Description |
|---|---|
| **CENTER** | The camera focuses on the subject at the center of the frame. |
| **AREA** | The frame is divided into a three-by-three grid for focus-area selection. |

## AF SENSITIVITY

Choose how long the focus system will continue to track the current subject after a new subject enters the frame at a different distance from the camera. The higher the value, the longer the camera will wait before switching subjects.

## IRIS

Choose the aperture value (iris). See "Specifications" (page 27) for supported values.

## SHUTTER SPEED

Choose the shutter speed.

| Option | Description |
|---|---|
| **AUTO** | The camera adjusts shutter speed automatically. You can choose the minimum shutter speed. |
| **MANUAL** | Choose the shutter speed manually. |

## GAIN

Adjust image brightness.

| Option | Description |
|---|---|
| **MANUAL** | Choose a value for gain. |
| **AGC** | The camera adjusts gain automatically to brighten the image when lighting is poor. |
| **HYPER-AGC** | Choose for automatic gain control adapted to low light conditions. |

## DAY/NIGHT

In day/night mode, the camera records in color when the subject is brightly lit and in black-and-white when the subject is poorly lit. This option is available when **OFF** is selected for **EXTERNAL TRIGGER**.

| Option | Description |
|---|---|
| **AUTO** | The camera selects day or night mode automatically according to lighting conditions. You can choose the lighting conditions that trigger the switch when **AUTO** is selected:<br>• **DAY to NIGHT THRESHOLD**: Choose the brightness threshold that triggers the switch from day to night (**0**–**255**).<br>• **NIGHT to DAY THRESHOLD**: Choose the brightness threshold that triggers the switch from night to day (**0**–**255**).<br>• **SWITCHING SENSITIVITY**: Choose how long (**0**–**60 S**) the camera waits to switch modes once the brightness threshold is crossed. |
| **SCHEDULED** | The camera switches to day or night mode at a selected time.<br>• **DAY START TIME**: Choose a time from 00:00 to 23:59.<br>• **NIGHT START TIME**: Choose a time from 00:00 to 23:59. |
| **AUTO & SCHEDULED** | Choose a light trigger and time for switching between day and night modes.<br>• **DAY to NIGHT THRESHOLD**: Choose the brightness threshold that triggers the switch from day to night (**0**–**255**).<br>• **NIGHT to DAY THRESHOLD**: Choose the brightness threshold that triggers the switch from night to day (**0**–**255**).<br>• **SWITCHING SENSITIVITY**: Choose how long (**0**–**60 S**) the camera waits to switch modes once the brightness threshold is crossed.<br>• **DAY START TIME**: Choose a time from 00:00 to 23:59.<br>• **NIGHT START TIME**: Choose a time from 00:00 to 23:59. |
| **DAY** | The camera operates in day mode at all times. |
| **NIGHT** | The camera operates in night mode at all times. |

**TIP** The **CAMERA SETTING** > **DAY/NIGHT**, **EXTERNAL TRIGGER**, and **IR WAVELENGTH** and the **IMAGE QUALITY SETTING** > **OPTICAL FILTER(DAY)** and **OPTICAL FILTER(NIGHT)** preferences are linked. For more information, see "Lighting Triggers" (page 13).

## EXTERNAL TRIGGER

Choose whether day/night selection is performed in response to an external trigger.

| Option | Description |
|---|---|
| **ON(VLC)** | Applies a VLC (Visible Light Cut) filter to the external trigger. The optical filters selected for day/night are disabled. |
| **ON(CLEAR)** | Replaces the filter with clear glass. The optical filters selected for day/night are disabled. |
| **OFF** | The camera does not respond to the external trigger. |

**TIP** The **CAMERA SETTING** > **DAY/NIGHT**, **EXTERNAL TRIGGER**, and **IR WAVELENGTH** and the **IMAGE QUALITY SETTING** > **OPTICAL FILTER(DAY)** and **OPTICAL FILTER(NIGHT)** preferences are linked. For more information, see "Lighting Triggers" (page 13).

## IR WAVELENGTH

Match the IR wavelength to the infrared light source used. See "Specifications" (page 27) for supported values.

> **TIP** The **CAMERA SETTING** > **DAY/NIGHT**, **EXTERNAL TRIGGER**, and **IR WAVELENGTH** and the **IMAGE QUALITY SETTING** > **OPTICAL FILTER(DAY)** and **OPTICAL FILTER(NIGHT)** preferences are linked. For more information, see "Lighting Triggers" (page 13).

## IMAGE STABILIZATION

Choose an image stabilization option adapted to the scene.

| Option | Description |
|---|---|
| **AUTO** | The camera chooses the type of image stabilization best suited to the scene. |
| **OIS** | Reduce the effects of camera shake using optical image stabilization. |
| **EIS** | Reduce the effects of camera shake using electronic image stabilization. |
| **OFF** | Image stabilization disabled. |

**Lighting Triggers**

Day/night selection can be configured in any of the following three ways:

| Configuration | Description | Configured using | |
|---|---|---|---|
| | | Menu item | Option |
| ① Auto | Day/night selection is performed automatically according to a schedule and/or lighting conditions. | **CAMERA SETTING** > **DAY/NIGHT** | **AUTO**, **SCHEDULED**, or **AUTO & SCHEDULED** |
| ② Manual | Day/night selection is performed manually. | | **DAY** or **NIGHT** |
| ③ External trigger | Day/night selection is performed in response to input from an external trigger. | **CAMERA SETTING** > **EXTERNAL TRIGGER** | **ON(VLC)***, **ON(CLEAR)***, or **OFF** |

* The optical filters chosen for day/night do not apply if a signal is received from the external trigger when **ON(VLC)** or **ON(CLEAR)** is selected for **EXTERNAL TRIGGER**. If no signal is received or if **OFF** is selected, the optical filter will function as shown in the following table.

The following table shows relation between the filter selected for day/night, image color, and wavelength:

| Option | Filter | Image color | CONFIGURATION SETTING > CAMERA SETTING > IR WAVELENGTH | |
|---|---|---|---|---|
| | | | Status | Supported wavelengths |
| **DAY** | IRC | Color | Disabled | Visible light only |
| | VLC | Black and white | | 808 nm only |
| **NIGHT** | CLEAR | | Enabled | 950 nm, 940 nm, 850 nm, 808 nm, visible light |
| | VLC | | | |

# IMAGE QUALITY SETTING

Adjust image quality settings.

## OPTICAL FILTER(DAY)

Choose an optical filter for day mode.

| Option | Description |
|---|---|
| **IRC** | Enable the IRC filter, blocking infrared light and recording only visible-light footage. |
| **VLC** | Enable the VLC filter, blocking visible light and recording only infrared footage. |

**TIP** The **CAMERA SETTING** > **DAY/NIGHT**, **EXTERNAL TRIGGER**, and **IR WAVELENGTH** and the **IMAGE QUALITY SETTING** > **OPTICAL FILTER(DAY)** and **OPTICAL FILTER(NIGHT)** preferences are linked. For more information, see "Lighting Triggers" (page 13).

## OPTICAL FILTER(NIGHT)

Choose an optical filter for night mode.

| Option | Description |
|---|---|
| **CLEAR** | Record footage in both infrared and visible light. |
| **VLC** | Enable the VLC filter, blocking visible light and recording only infrared footage. |

**TIP** The **CAMERA SETTING** > **DAY/NIGHT**, **EXTERNAL TRIGGER**, and **IR WAVELENGTH** and the **IMAGE QUALITY SETTING** > **OPTICAL FILTER(DAY)** and **OPTICAL FILTER(NIGHT)** preferences are linked. For more information, see "Lighting Triggers" (page 13).

## WDR

Reduce loss of detail in highlights and shadows. Choose higher values for high-contrast subjects.

## BACKLIGHT CORRECTION

Reduce loss of detail in the shadowed areas of backlit subjects. The higher the value, the greater the effect.

## HEAT HAZE REDUCTION

Reduce the wavering effect of heat haze, making the image clearer overall. The higher the value, the greater the effect.

## FOG REDUCTION

Make images where the subject is obscured by fog more vivid and easier to see. The higher the value, the greater the effect.

## NOISE REDUCTION

Reduce the effects of noise for a smoother picture. The higher the value, the greater the effect.

## DIGITAL ZOOM

Select **ON** to enable digital zoom.

## USE SETTING

Choose a shooting preset.

| Option | Description |
|---|---|
| **SURVEILLANCE** | Emphasize outlines. |
| **MOVIE PRODUCTION** | Choose for accurate color reproduction when shooting non-surveillance footage at social gatherings or other events. |

## BRIGHTNESS

Adjust brightness. The higher the value, the greater the effect.

## CONTRAST

Adjust contrast. The higher the value, the greater the effect.

## SATURATION

Adjust color saturation. The higher the value, the greater the effect.

## SHARPNESS

Make outlines more or less sharply defined. The higher the value, the greater the effect.

## WHITE BALANCE

Match white balance to the light source (for example, sunlight or artificial lighting).

| Option | Description |
|---|---|
| **AUTO** | The camera adjusts white balance automatically. |
| **CUSTOM 1/CUSTOM 2** | Measure a value for white balance using a piece of paper or other white reference object. |
| **FINE** | For subjects lit by direct sunlight. |
| **SHADE** | For subjects in the shade or under overcast skies. |
| **COLOR TEMPERATURE** | Choose a color temperature (**3000K**, **5000K**, or **9000K**). |

## SYSTEM

View the firmware version and other information. You can also set the camera clock and adjust other system-related settings.

### MODEL NAME

View the camera model name.

### SERIAL NO.

View the product serial number.

### FW VER.

View the camera firmware version.

### APPLICATION VER.

View the application version.

### TIME ZONE

Choose a time zone.

### NTP SERVER ADDRESS

Enter the IP address for the NTP (Network Time Protocol) server.

### PORT NUMBER

Choose the NTP server port.

### CHECKING INTERVAL

Choose how often the camera checks the NTP server port.

### PRIORITY OF TIME SETTING

Choose whether the time display matches the camera's internal clock (**DEVICE**) or the time reported by the NTP server (**NTP**).

| Option | Description |
|---|---|
| **DEVICE** | The display shows the time reported by the camera's internal clock. |
| **NTP** | The display shows the time reported by the NTP server. |

### IN-CAMERA TIME SETTING

Set the camera clock.

### ABOUT DEVICE

View OSS information.

# PTZ SETTING

Adjust settings for remote-control mounts.

**TIP** You will need to turn the camera off and then on again after adjusting settings in this menu.

## RS485 BAUD RATE

Choose the baud rate for data transmitted via RS485.

| Options | | | | | |
|---|---|---|---|---|---|
| **115200bps** | **38400bps** | **19200bps** | **9600bps** | **4800bps** | **2400bps** |

## RS485 ID

Choose the RS485 ID (**1**–**31**).

## RS485 TERMINATION

Select **ON** to enable the RS485 termination resistor.

## PTZ POSITION INQUIRY

Choose whether the camera queries remote-control mounts for pan and tilt positions.

**CAUTION** Select **ON** when using the camera with remote-control mounts that support position queries.

## Pelco-P/Pelco-D

Choose a communications protocol.

## PELCO CMD INTERVAL

Choose the interval at which the camera sends Pelco commands to remote-control mounts (**10**–**300** msec).

## SYSTEM MAINTENANCE

Restart the camera, update camera firmware, and perform other forms of system maintenance.

### REBOOT

Select **OK** to restart the camera.

### RESET SETTINGS

Select **OK** to restore camera settings to their default values. Items in the following menus are not affected:

- **NETWORK SETTING**

### IMPORT CONFIGURATION FILE

Import settings from a camera settings file. Click **BROWSE** and choose a settings file created using **EXPORT TO CONFIGURATION FILE**.

### EXPORT TO CONFIGURATION FILE

Export camera settings. Click **OK** to download the settings folder.

### FW UPDATE

Update the camera firmware. Click **BROWSE** and select the file containing the new firmware version to begin the update.

### COPY LOG DATA

Save a copy of camera logs. Click **BROWSE**, choose a destination, and click **OK** to save the logs.

### CHANGE PASSWORD

Change the camera login password.

## SECURITY

Adjust network security settings.

### RTSP AUTHENTICATION

Choose an RTSP authentication method (**DISABLE**, **BASIC**, or **DIGEST**).

### RTSP AUTHENTICATION ALGORITHM

Choose an algorithm for **DIGEST** authentication (**MD5** or **SHA256**).

### HTTP AUTHENTICATION

Choose an HTTP authentication method (**BASIC** or **DIGEST**).

**TIP** The MD5 authentication algorithm is used for HTTP. Users wishing to switch to SHA256 can do so via CGI commands. This service can be requested from your retailer.

# NETWORK SETTING

Adjust basic network settings.

## IPv4 ADDRESS

Enter the camera's IPv4 address.

## IPv4 SUBNET MASK

Enter the camera's IPv4 subnet mask.

## IPv4 DEFAULT GATEWAY

Enter the camera's default IPv4 gateway.

## MAC ADDRESS

View the camera's MAC address.

## IPv4 MTU

Choose the maximum volume of data that can be transmitted per packet (frame).

## PRIORITY DNS SERVER

Enter the IP address of the primary DNS server.

## SECONDARY DNS SERVER

Enter the IP address of the secondary DNS server.

## IPv4 ADDRESS

Choose how the camera's IPv4 address is assigned.

| Option | Description |
|---|---|
| **DISABLE** | The camera is not assigned an IPv4 address. |
| **MANUAL** | Enter the camera's IPv4 address manually. |
| **AUTO (DHCP)** | Enable automatic IPv4 address allocation via the Dynamic Host Configuration Protocol (DHCP). |

## PORT

Adjust port settings.

### HTTP PORT

Choose the HTTP port.

### RTSP PORT

Choose the RTSP port.

# VIDEO

Adjust video settings.

## VIDEO SYSTEM

Choose the standard (**NTSC (60 Hz)** or **PAL (50 Hz)**) used for video output from the camera.

## VIDEO FORMAT

Choose the frame size for video shot using the camera.

## ASPECT FOR VIDEO

Choose how video is displayed on monitors with an aspect ratio that does not match the selected format.

| Option | Description |
|---|---|
| **SIDE CUT** | The image is cropped to fit the display. |
| **LETTERBOX** | The image is displayed at its original aspect ratio with black bars above and below. |
| **SQUEEZE** | Video with an aspect ratio of 16 : 9 is reformatted to fit displays with a 4 : 3 aspect ratio. |

## BIT RATE

Choose whether streaming video is encoded at a **FIXED** or **VARIABLE** bit rate. Note that this option is available only when H.264 encoding is selected.

## VIDEO QUALITY

Choose the output quality for streaming video (**HIGH**, **STANDARD**, or **LOW**). Note that this option is available only when H.264 encoding is selected.

## FRAME RATE

Choose the frame rate for streaming video from values between 1 and 30 fps.

## ENCODING

Choose an encoding for streaming video.

## I FRAME INTERVAL

Choose the I-Frame interval for streaming video.

## DISPLAY/OSD SETTING

Adjust display settings.

### DATE DISPLAY

Select **ON** to show the date in the live feed.

### TIME DISPLAY

Choose whether times are displayed using a 12- or 24-hour clock.

### DATE DISPLAY FORMAT

Choose the order in which the year, month, and day are displayed.

## 言語/LANG.

Choose a language for camera menus and displays.

### 言語/LANG.

Choose a language.

# Troubleshooting

Should the product fail to function as expected, consult the table below. If you are unable to find a solution here, contact your local Fujifilm distributor.

| Problem | Solution |
|---|---|
| No video, or the image in the video is dark. | • **The camera is off**: Check that the cables are correctly connected, the power lamp is lit, and the correct voltage is being supplied to the lens.<br>• **The cables are not correctly connected**: Check that the cables are correctly connected.<br>• **The lens cap is on**: Remove the lens cap.<br>• **The iris is stopped down to the minimum aperture**: Select maximum aperture.<br>• **Shutter speed requires adjustment**: Select an appropriate value for shutter speed. |
| The image in the video is "washed out". | • **Camera white balance, gain, shutter speed, or other settings require adjustment**: Confirm that settings are adjusted appropriately.<br>• **Aperture requires adjustment**: Adjust aperture appropriately. |
| The image in the video is out of focus. | • **The lens is dirty**: Clean the lens. |
| Spots appear in the video. | |

# Defaults

Selecting **OK** for **SYSTEM MAINTENANCE** > **RESET SETTINGS** restores settings to the following default values:

## CAMERA SETTING

| Option | Default |
|---|---|
| AF SETTING | QUICK AF |
| FOCUS AREA | CENTER |
| AF SENSITIVITY | 1 |
| IRIS | AUTO |
| SHUTTER SPEED | AUTO (1/30) |
| GAIN | AGC |
| DAY/NIGHT | AUTO<br>• **DAY to NIGHT THRESHOLD**: 70<br>• **NIGHT to DAY THRESHOLD**: 130<br>• **SWITCHING SENSITIVITY**: 7 S |
| EXTERNAL TRIGGER | OFF |
| IR WAVELENGTH | VISIBLE LIGHT |
| IMAGE STABILIZATION | AUTO |

## IMAGE QUALITY SETTING

| Option | Default |
|---|---|
| OPTICAL FILTER(DAY) | IRC |
| OPTICAL FILTER(NIGHT) | CLEAR |
| WDR | OFF |
| BACKLIGHT CORRECTION | OFF |
| HEAT HAZE REDUCTION | OFF |
| FOG REDUCTION | OFF |
| NOISE REDUCTION | 2 |
| DIGITAL ZOOM | OFF |
| USE SETTING | SURVEILLANCE |
| BRIGHTNESS | 11 |
| CONTRAST | 3 |
| SATURATION | 3 |
| SHARPNESS | 4 |
| WHITE BALANCE | AUTO |

## SYSTEM

| Option | Default |
|---|---|
| MODEL NAME | — |
| SERIAL NO. | — |
| FW VER. | — |
| APPLICATION VER. | — |
| TIME ZONE | — |
| IN-CAMERA TIME SETTING | — |
| ABOUT DEVICE | — |

## PTZ SETTING

| Option | Default |
|---|---|
| RS485 BAUD RATE | 9600bps |
| RS485 ID | 7 |
| RS485 TERMINATION | ON |
| Pelco-P/Pelco-D | Pelco-D |

## SYSTEM MAINTENANCE

| Option | Default |
|---|---|
| REBOOT | — |
| RESET SETTINGS | — |
| IMPORT CONFIGURATION FILE | — |
| EXPORT TO CONFIGURATION FILE | — |
| FW UPDATE | — |
| COPY LOG DATA | — |

## SECURITY

| Option | Default |
|---|---|
| RTSP AUTHENTICATION | BASIC |
| RTSP AUTHENTICATION ALGORITHM | MD5 |
| HTTP AUTHENTICATION | BASIC |

## NETWORK SETTING

| Option | Default |
|---|---|
| IPv4 ADDRESS | 192.168.1.10 |
| IPv4 SUBNET MASK | 255.255.255.0 |
| IPv4 DEFAULT GATEWAY | 192.168.1.254 |
| MAC ADDRESS | — |
| IPv4 MTU | 1500 |
| PRIORITY DNS SERVER | 192.168.1.254 |
| SECONDARY DNS SERVER | — |
| IPv4 ADDRESS | MANUAL |

## DISPLAY/OSD SETTING

| Option | Default |
|---|---|
| DATE DISPLAY | ON |
| TIME DISPLAY | 24H |
| DATE DISPLAY FORMAT | MM-DD-YYYY |

## 言語/LANG

| Option | Default |
|---|---|
| 言語/LANG | ENGLISH |

# Specifications

| | |
|---|---|
| **Model** | FUJIFILM SX800 |
| **Focal length** | 20–800 mm |
| **Optical zoom** | 40× |
| **Digital zoom** | 1.25× |
| **Iris range** | f/4–f/16 |
| **Minimum object distance (M.O.D.)*** | 10 m "at focal lengths of 20–400 mm"<br>20 m "at focal lengths of 401–800 mm" |
| **Image sensor** | CMOS sensor |
| **Video** | • File format: MOV<br>• Video compression: H.264 compliant |
| **Frame size** | 1920 × 1080, 1280 × 720, 640 × 480 (NTSC), 768 × 576 (PAL) |
| **Metering** | Average |
| **Focus modes** | Continuous AF, quick AF, MF |
| **Aperture selection** | Auto, f/4–f/16 |
| **Shutter speed** | Auto (with minimum speed selection of 1/8 – 1/125 s), manual (1 – 1/20000 s) |
| **Gain adjustment** | Manual (ISO 400 – ISO 819200), AGC, HYPER AGC |
| **Day/night selection** | AUTO, SCHEDULED, AUTO & SCHEDULED, DAY, NIGHT |
| **Wavelengths** | VISIBLE LIGHT, 950 nm, 940 nm, 850 nm, 808 nm |
| **Image stabilization** | Available (AUTO, OIS, EIS, OFF) |
| **Wide dynamic range** | Selectable (2 levels) |
| **Back light compensation** | Selectable (2 levels) |
| **Heat haze reduction** | Selectable (3 levels) |
| **Fog reduction** | Selectable (3 levels) |
| **Noise reduction** | Selectable (3 levels) |
| **Shooting Mode Preset** | Surveillance, movie production |
| **Brightness** | Selectable (21 levels) |
| **Contrast** | Selectable (5 levels) |
| **Saturation** | Selectable (5 levels) |
| **Sharpening** | Selectable (5 levels) |
| **White balance** | Auto, Custom 1–2, fine, shade, color temperature (degrees Kelvin) selection (3000K, 5000K, 9000K) |
| **Image output connectors** | HDMI, HD-SDI, composite (BNC) |
| **Audio input/output** | • Input impedance: 40K Ω<br>• Output impedance: 200 Ω |
| **Video output** | • NTSC: 1080p, 720p, 480p<br>• PAL: 1080p, 720p, 576p |
| **External interface** | 100BASE-T, RS-485, external trigger (day/night selection) |
| **Baud rate** | 152000 bps, 38400 bps, 19200 bps, 9600 bps, 4800 bps, 2400 bps |
| **Internet protocol** | ONVIF (port number 8080) HTTP, RTSP |
| **RS-485 protocol** | Pelco D, P (includes custom commands) |
| **Power source** | DC 12 V |
| **Power consumption** | 9.5 W |
| **Dimensions (W × H × D)** | 156 mm × 139 mm × 410 mm/6.14 in. × 5.47 in. × 16.14 in. |
| **Weight** | Approx. 6.4 kg/14.11 lb |
| **Operating environment** | • Temperature: –10 °C – +50 °C/+14 °F – +122 °F<br>• Humidity: 10% – 80% (no condensation) |
| **Tilt limit** | ±45° from level (base down) |

* From the foremost part of the forward lens

FUJIFILM

**FUJIFILM Corporation** 7-3, Akasaka 9-chome, Minato-ku, Tokyo 107-0052, Japan
http://www.fujifilm.com/

HDMI®
HIGH-DEFINITION MULTIMEDIA INTERFACE